**AGREEMENT FOR PROJECT SERVICES**
**BETWEEN THE CITY OF REDONDO BEACH**
**AND 72 HOUR LLC DBA WATSONVILLE FLEET GROUP**

THIS AGREEMENT FOR PROJECT SERVICES (this "Agreement") is made between the City of Redondo Beach, a chartered municipal corporation ("City") and 72 Hour LLC, a California limited liability company dba Watsonville Fleet Group ("Contractor" or "Consultant").

The parties hereby agree as follows:

A. Description of Project or Scope of Services. The project description or scope of services to be provided by Contractor, and any corresponding responsibilities of City or services required to be performed by City are set forth in Exhibit "A".

B. Term and Time of Completion. Contractor shall commence and complete the project or services described in Exhibit "A" in accordance with the schedule set forth in Exhibit "B".

C. Compensation. City agrees to pay Contractor for work performed in accordance with Exhibit "C".

D. Insurance. Contractor shall adhere to the insurance requirements outlined in Exhibit "D", unless otherwise waived by the City's Risk Manager.

E. Agreement to Comply with California Labor Law Requirements. Contractor agrees to comply with all applicable California Labor Law Requirements as set forth in Exhibit "E".

* * * * *

## GENERAL PROVISIONS

1. Independent Contractor. Contractor acknowledges, represents and warrants that Contractor is not a regular or temporary employee, officer, agent, joint venturer or partner of the City, but rather an independent contractor. This Agreement shall not be construed as a contract of employment. Contractor shall have no rights to any benefits which accrue to City employees unless otherwise expressly provided in this Agreement. Due to the independent contractor relationship created by this Agreement, the City shall not withhold state or federal income taxes, the reporting of which shall be Contractor's sole responsibility.

2. Brokers. Contractor acknowledges, represents and warrants that Contractor has not hired, retained or agreed to pay any entity or person any fee, commission,

percentage, gift, or any other consideration, contingent upon or resulting from the award or making of this Agreement.

3. City Property. All plans, drawings, reports, calculations, data, specifications, videos, graphics or other materials prepared for or obtained pursuant to this Agreement shall upon request be delivered to the City within a reasonable time, and the rights thereto shall be deemed assigned to the City. If applicable, Contractor shall prepare check prints upon request. Said plans, drawings, reports, calculations, data, specifications, videos, graphics or other materials shall be specific for the project herein and shall not be used by the City for any other project without Contractor's consent. Notwithstanding the foregoing, Contractor shall not be obligated to assign any proprietary software or data developed by or at the direction of Contractor for Contractor's own use; provided, however, that Contractor shall, pursuant to Paragraph 14 below, indemnify, defend and hold the City harmless from and against any discovery or Public Records Act request seeking the disclosure of any such proprietary software or data.

4. Inspection. If the services set forth in Exhibit "A" shall be performed on City or other public property, the City shall have the right to inspect such work without notice. If such services shall not be performed on City or other public property, the City shall have the right to inspect such work upon reasonable notice. Inspections by the City shall not relieve or minimize the responsibility of Contractor to conduct any inspections Contractor has agreed to perform pursuant to the terms of this Agreement. Contractor shall be solely liable for said inspections performed by Contractor. Contractor shall certify in writing to the City as to the completeness and accuracy of each inspection required to be conducted by Contractor hereunder.

5. Services. The project or services set forth in Exhibit "A" shall be performed to the full satisfaction and approval of the City. In the event that the project or services set forth in Exhibit "A" are itemized by price in Exhibit "C", the City in its sole discretion may, upon notice to Contractor, delete certain items or services set forth in Exhibit "A", in which case there shall be a corresponding reduction in the amount of compensation paid to Contractor. City shall furnish Contractor, to the extent available, with any City standards, details, specifications and regulations applicable to the Project and necessary for the performance of Contractor's services hereunder. Notwithstanding the foregoing, any and all additional data necessary for design shall be the responsibility of Contractor.

6. Records. Contractor, including any of its subcontractors, shall maintain full and complete documents and records, including accounting records, employee time sheets, work papers, and correspondence pertaining to the project or services set forth in Exhibit "A". Contractor, including any of its subcontractors, shall make such documents and records available for City review or audit upon request and reasonable notice, and shall keep such documents and records, for

at least five (5) years after Contractor's completion of performance of this Agreement. Copies of all pertinent reports and correspondence shall be furnished to the City for its files.

7. Changes and Extra Work. All changes and/or extra work under this Agreement shall be performed and paid for in accordance with the following:

   Only the City Council, City Manager, or the Department Head responsible for the administration of, or supervision of the scope of work under, this Agreement may authorize extra and/or changed work. Contractor expressly recognizes that other City personnel are without authorization to either order extra and/or changed work or waive contract requirements. Failure of Contractor to secure the written authorization for such extra and/or changed work shall constitute a waiver of any and all right to adjustment in contract price due to such unauthorized work and Contractor thereafter shall be entitled to no compensation whatsoever for performance of such work.

   If Contractor is of the opinion that any work which Contractor has been directed to perform is beyond the scope of this Agreement and constitutes extra work, Contractor shall promptly notify the City of the fact. The City shall make a determination as to whether or not such work is, in fact, beyond the scope of this Agreement and constitutes extra work. In the event that the City determines that such work does constitute extra work, City shall provide extra compensation to Contractor on a fair and equitable basis. A written amendment providing for such compensation for extra work shall be executed by Contractor and the City.

8. Additional Assistance. If this Agreement requires Contractor to prepare plans and specifications, Contractor shall provide assistance as necessary to resolve any questions regarding such plans and specifications that may arise during the period of advertising for bids, and Contractor shall issue any necessary addenda to the plans and specifications as requested. In the event Contractor is of the opinion that City's requests for addenda and assistance is outside the scope of normal services, the parties shall proceed in accordance with the changes and extra work provisions of this Agreement.

9. Professional Ability. Contractor acknowledges, represents and warrants that Contractor is skilled and able to competently provide the services hereunder, and possesses all professional licenses, certifications, and approvals necessary to engage in its occupation. City has relied upon the professional ability and training of Contractor as a material inducement to enter into this Agreement. Contractor shall perform in accordance with generally accepted professional practices and standards of Contractor's profession.

10. Business License. Contractor shall obtain a Redondo Beach Business License before performing any services required under this Agreement. The failure to so obtain such license shall be a material breach of this Agreement and grounds for

immediate termination by City; provided, however, that City may waive the business license requirement in writing under unusual circumstances without necessitating any modification of this Agreement to reflect such waiver.

11. Termination Without Default. Notwithstanding any provision herein to the contrary, the City may, in its sole and absolute discretion and without cause, terminate this Agreement at any time prior to completion by Contractor of the project or services hereunder, immediately upon written notice to Contractor. In the event of any such termination, Contractor shall be compensated for: (1) all authorized work satisfactorily performed prior to the effective date of termination; and (2) necessary materials or services of others ordered by Contractor for this Agreement prior to Contractor's receipt of notice of termination, irrespective of whether such materials or services of others have actually been delivered, and further provided that Contractor is not able to cancel such orders. Compensation for Contractor in such event shall be determined by the City in accordance with the percentage of the project or services completed by Contractor; and all of Contractor's finished or unfinished work product through the time of the City's last payment shall be transferred and assigned to the City. In conjunction with any termination of this Agreement, the City may, at its own expense, make copies or extract information from any notes, sketches, computations, drawings, and specifications or other data, whether complete or not.

12. Termination in the Event of Default. Should Contractor fail to perform any of its obligations hereunder, within the time and in the manner provided or otherwise violate any of the terms of this Agreement, the City may immediately terminate this Agreement by giving written notice of such termination, stating the reasons for such termination. Contractor shall be compensated as provided immediately above, provided, however, there shall be deducted from such amount the amount of damages, if any, sustained by the City by virtue of Contractor's breach of this Agreement.

13. Conflict of Interest. Contractor acknowledges, represents and warrants that Contractor shall avoid all conflicts of interest (as defined under any federal, state or local statute, rule or regulation, or at common law) with respect to this Agreement. Contractor further acknowledges, represents and warrants that Contractor has no business relationship or arrangement of any kind with any City official or employee with respect to this Agreement. Contractor acknowledges that in the event that Contractor shall be found by any judicial or administrative body to have any conflict of interest (as defined above) with respect to this Agreement, all consideration received under this Agreement shall be forfeited and returned to City forthwith. This provision shall survive the termination of this Agreement for one (1) year.

14. Indemnity. To the maximum extent permitted by law, Contractor hereby agrees, at its sole cost and expense, to defend, protect, indemnify, and hold harmless the City, its elected and appointed officials, officers, employees, volunteers,

attorneys, and agents (collectively "Indemnitees") from and against any and all claims, including, without limitation, claims for bodily injury, death or damage to property, demands, charges, obligations, damages, causes of action, proceedings, suits, losses, stop payment notices, judgments, fines, liens, penalties, liabilities, costs and expenses of every kind and nature whatsoever, in any manner arising out of, incident to, related to, in connection with or arising from any act, failure to act, error or omission of Contractor's performance or work hereunder (including any of its officers, agents, employees, Subcontractors) or its failure to comply with any of its obligations contained in the Agreement, or its failure to comply with any current or prospective law, except for such loss or damage which was caused by the sole negligence or willful misconduct of the City. Notwithstanding the foregoing, nothing in this Section 14 shall be construed to encompass Indemnitees' active negligence to the limited extent that this Agreement is subject to Civil Code Section 2782(b). Contractor's obligation to indemnify shall not be restricted to insurance proceeds, if any, received by Contractor or Indemnitees. This indemnification obligation shall survive this Agreement and shall not be limited by any term of any insurance policy required under this Agreement.

a. Nonwaiver of Rights. Indemnitees do not and shall not waive any rights that they may possess against Contractor because the acceptance by City, or the deposit with City, of any insurance policy or certificate required pursuant to this Agreement.

b. Waiver of Right of Subrogation. Contractor, on behalf of itself and all parties claiming under or through it, hereby waives all rights of subrogation and contribution against the Indemnitees.

15. Insurance. Contractor shall comply with the requirements set forth in Exhibit "D". Insurance requirements that are waived by the City's Risk Manager do not require amendments or revisions to this Agreement.

16. Non-Liability of Officials and Employees of the City. No official or employee of the City shall be personally liable for any default or liability under this Agreement.

17. Compliance with Laws. Contractor shall comply with all federal, state and local laws, statutes, ordinances, rules and regulations, and the orders and decrees of any courts or administrative bodies or tribunals, with respect to this Agreement, including without limitation all environmental laws, and employment laws.

a. Acknowledgement. Contractor acknowledges that eight (8) hours labor constitutes a legal day's work. Contractor shall comply with and be bound by Labor Code Section 1810. Contractor shall comply with and be bound by the provisions of Labor Code Section 1813 concerning penalties for workers who work excess hours. Contractor shall, as a penalty to the City, forfeit twenty-five dollars ($25) for each worker employed in the performance of this Agreement

by the Contractor or by any subcontractor for each calendar day during which such worker is required or permitted to work more than eight (8) hours in any one (1) calendar day and forty (40) hours in any one calendar week. Pursuant to Labor Code section 1815, work performed by employees of Contractor in excess of 8 hours per day, and 40 hours during any one week shall be permitted upon public work upon compensation for all hours worked in excess of 8 hours per day at not less than 11/2 times the basic rate of pay. For every subcontractor who will perform work on the project, Contractor shall be responsible for such subcontractor's compliance with Labor Code Sections 1810, 1813 and 1815, and Contractor shall include in the written contract between it and each subcontractor copies of Labor Code Sections 1810, 1813 and 1815 and a requirement that each subcontractor shall comply with these aforementioned sections. Contractor shall be required to take all actions necessary to enforce such contractual provisions and ensure subcontractor's compliance, including without limitation, conducting a periodic review of the certified payroll records of the subcontractor and upon becoming aware of the failure of the subcontractor comply with Labor Code Sections 1810, 1813 and 1815, Contractor shall diligently take corrective action to halt or rectify the failure.

b. Labor Law Requirements. Contractor shall comply with the Agreement to Comply with California Labor Law Requirements set forth in Exhibit "E", which is attached hereto and incorporated by reference. State prevailing wage determinations are available on the California Department of Industrial Relations ("DIR") website located at https://www.dir.ca.gov/Public-Works/Prevailing-Wage.html.

18. Non-Discrimination. Contractor shall comply with all applicable federal, state, and local laws, ordinances, regulations, and codes prohibiting discrimination, including but not limited to the Civil Rights Act of 1964, the Americans with Disabilities Act of 1990, and the California Fair Employment and Housing Act. Contractor shall not discriminate against any employee or applicant for employment on the basis of race, religious creed, color, national origin, ancestry, physical disability, mental disability, medical condition, genetic information, marital status, sex, gender, gender identity, gender expression, age, sexual orientation, military and veteran status, or any other legally protected characteristic. Contractor shall ensure that the evaluation and treatment of its employees and applicants for employment are free from such discrimination and harassment. Contractor shall include a similar non-discrimination provision in all subcontracts related to the performance of this Agreement.

19. Limitations upon Subcontracting and Assignment. Contractor acknowledges that the services which Contractor shall provide under this Agreement are unique, personal services which, except as otherwise provided herein, Contractor shall not assign or sublet to any other party without the prior written approval of City, which approval may be withheld in the City's sole and absolute discretion. In the

event that the City, in writing, approves any assignment or subletting of this Agreement or the retention of subcontractors by Contractor, Contractor shall provide to the City upon request copies of each and every subcontract prior to the execution thereof by Contractor and subcontractor. Any attempt by Contractor to assign any or all of its rights under this Agreement without first obtaining the City's prior written consent shall constitute a material default under this Agreement.

The sale, assignment, transfer or other disposition, on a cumulative basis, of twenty-five percent (25%) or more of the ownership interest in Contractor or twenty-five percent (25%) or more the voting control of Contractor (whether Contractor is a corporation, limited liability company, partnership, joint venture or otherwise) shall constitute an assignment for purposes of this Agreement. Further, the involvement of Contractor or its assets in any transaction or series of transactions (by way of merger, sale, acquisition, financing, transfer, leveraged buyout or otherwise), whether or not a formal assignment or hypothecation of this Agreement or Contractor's assets occurs, which reduces Contractor's assets or net worth by twenty-five percent (25%) or more shall also constitute an assignment for purposes of this Agreement.

20. Subcontractors. Contractor shall provide properly skilled professional and technical personnel to perform any approved subcontracting duties. Contractor shall not engage the services of any person or persons now employed by the City without the prior written approval of City, which approval may be withheld in the City's sole and absolute discretion.

21. Integration. This Agreement constitutes the entire agreement between the parties concerning the subject matter hereof and supersedes any previous oral or written agreement; provided, however, that correspondence or documents exchanged between Contractor and City may be used to assist in the interpretation of the exhibits to this Agreement.

22. Amendment. This Agreement may be amended or modified only by a subsequent written amendment executed by both parties.

23. Conflicting Provisions. In the event of a conflict between the terms and conditions of this Agreement and those of any exhibit or attachment hereto, this Agreement proper shall prevail. In the event of a conflict between the terms and conditions of any two or more exhibits or attachments hereto, those prepared by the City shall prevail over those prepared by Contractor.

24. Non-Exclusivity. Notwithstanding any provision herein to the contrary, the services provided by Contractor hereunder shall be non-exclusive, and City reserves the right to employ other contractors in connection with the project.

25. Exhibits. All exhibits hereto are made a part hereof and incorporated herein by reference; provided, however, that any language in Exhibit "A" which does not pertain to the project description, proposal, or scope of services (as applicable) to be provided by Contractor, or any corresponding responsibilities of City, shall be deemed extraneous to, and not a part of, this Agreement.

26. Time of Essence. Time is of the essence of this Agreement.

27. Confidentiality. To the extent permissible under law, Contractor shall keep confidential its obligations hereunder and the information acquired during the performance of the project or services hereunder.

28. Third Parties. Nothing herein shall be interpreted as creating any rights or benefits in any third parties. For purposes hereof, transferees or assignees as permitted under this Agreement shall not be considered "third parties."

29. Governing Law and Venue. This Agreement shall be construed in accordance with the laws of the State of California without regard to principles of conflicts of law. Venue for any litigation or other action arising hereunder shall reside exclusively in the Superior Court of the County of Los Angeles, Southwest Judicial District.

30. Attorneys' Fees. In the event either party to this Agreement brings any action to enforce or interpret this Agreement, the prevailing party in such action shall be entitled to reasonable attorneys' fees (including expert witness fees) and costs. This provision shall survive the termination of this Agreement.

31. Claims. Any claim by Contractor against City hereunder shall be subject to Government Code §§ 810 *et seq*. The claims presentation provisions of said Act are hereby modified such that the presentation of all claims hereunder to the City shall be waived if not made within six (6) months after accrual of the cause of action.

32. Interpretation. Contractor acknowledges that it has had ample opportunity to seek legal advice with respect to the negotiation of this Agreement. This Agreement shall be interpreted as if drafted by both parties.

33. Warranty; Correction of Work.
    a. Contractor warrants that all products and work provided under this Agreement shall:
        1. be delivered with good title, free of liens and encumbrances;
        2. conform to the requirements of this Agreement;
        3. be free from defects in materials and workmanship; and
        4. be fit for their intended purpose.

b. Unless a longer warranty applies, Contractor's warranty shall remain in effect for one (1) year from the date of delivery or acceptance by the City, whichever is later, except that consumable items shall be warranted for thirty days from the date of delivery or City acceptance, whichever is later. This warranty is in addition to, and shall not reduce or replace, any applicable OEM, body manufacturer, equipment manufacturer, supplier, or subcontractor warranty. Contractor shall obtain and pass through to the City all applicable warranties provided by the OEM, body manufacturer, equipment manufacturers, suppliers, and subcontractors. Contractor shall obtain and pass through to the City an OEM delayed warranty commencement date for each Vehicle described in Exhibit "A" based on the actual in-service date of the completed Vehicle. Contractor shall provide the City with written evidence of the delayed warranty commencement date before City acceptance of the applicable Vehicle.

c. For purposes of this Section, "consumable items" means items ordinarily depleted through normal use. Consumable items do not include installed equipment, batteries, electrical or lighting components, finishes, graphics, manufactured or fabricated components, or other components intended to remain in service as part of the completed Vehicles.

d. If during the applicable warranty period, the City determines that any product or work is defective or nonconforming, Contractor shall, upon the City's written notice and at its sole cost and expense, promptly repair, correct, or replace the defective or nonconforming product or work, including all labor, supervision, materials, transportation, removal, reinstallation, and related costs.

e. If Contractor fails to commence the required warranty work within thirty (30) days of City's written request, or thereafter fails to diligently complete the warranty work, the City may perform the work and the Contractor shall reimburse the City for its reasonable costs. All corrected or replaced work shall be warranted for one year following the City's acceptance of the correction or replacement, or for the remaining term of the original applicable warranty, whichever is longer.

f. Contractor shall remain the City's primary point of contact for all warranty claims involving the chassis, truck bodies, upfit, electrical systems, communications systems, graphics, and installed equipment.

Nothing in this Section 33 shall limit Contractor's obligation to correct or replace defective work or Contractor's indemnity obligations under Section 14. The warranty set forth in this Agreement shall survive the termination or expiration of this Agreement and shall remain in full force and effect for the applicable warranty periods stated herein and under any assigned or passed-through third-party warranties.

34. Severance. Any provision of this Agreement that is found invalid or unenforceable shall be deemed severed and all remaining provisions of this Agreement shall remain enforceable to the fullest extent permitted by law.

35. Authority. City warrants and represents that upon City Council approval, the Mayor of the City of Redondo Beach is duly authorized to enter into and execute this Agreement on behalf of City. The party signing on behalf of Contractor warrants and represents that he or she is duly authorized to enter into and execute this Agreement on behalf of Contractor, and shall be personally liable to City if he or she is not duly authorized to enter into and execute this Agreement on behalf of Contractor.

36. Waiver. The waiver by the City of any breach of any term or provision of this Agreement shall not be construed as a waiver of any subsequent breach.

*SIGNATURES FOLLOW ON NEXT PAGE*

IN WITNESS WHEREOF, the parties have executed this Agreement in Redondo Beach, California, as of this 4th day of August, 2026.

CITY OF REDONDO BEACH,
a chartered municipal corporation

_____
James A. Light, Mayor

72 HOUR LLC, a California limited liability company dba Watsonville Fleet Group

DocuSigned by:
KEVIN BUZZARD
6A749242B7E34A4...

By: _____
Name: KEVIN BUZZARD
Title: Fleet Mgr
7/23/2026 | 6:20 AM PDT

ATTEST:

_____
Eleanor Manzano, City Clerk

APPROVED:

_____
Diane Strickfaden, Risk Manager

APPROVED AS TO FORM:

_____
Joy A. Ford, City Attorney

## EXHIBIT "A"

## PROJECT DESCRIPTION AND/OR SCOPE OF SERVICES

### A. PROJECT OVERVIEW

The Project consists of the purchase, fabrication, upfitting, testing, registration, and delivery of two (2) fully equipped Fire Paramedic Squad trucks for use by the City Fire Department (collectively, the "Vehicles"). Each Vehicle shall be built on a new Model Year 2027 Ram 4500 Chassis Cab Big Horn 4x2 Crew Cab, 60-inch cab-to-axle, 173.4-inch wheelbase. This Project is described in this Exhibit "A" and Attachment "A-1".

The Contractor's Response to RFP No. 2526-006, dated January 19, 2026, and revised May 19, 2026, including the Vehicle specifications, equipment descriptions, subcontractor quotations, and pricing information contained therein, is attached to this Exhibit "A" as Attachment "A-1" and incorporated herein by reference. In the event of a conflict or inconsistency between this Exhibit "A" and Attachment "A-1", this Exhibit "A" shall control.

Contractor shall coordinate the work performed by California Truck Equipment Company ("CTEC"), 911 Vehicle, and any other City authorized subcontractor or supplier. Contractor shall remain fully responsible for all work performed by its subcontractors and suppliers as if performed directly by Contractor. No subcontracting shall relieve Contractor of any obligation under the Agreement.

### B. SCOPE OF WORK

The Project includes:

1. Purchase of the chassis and completion of the Vehicles in accordance with Attachment "A-1".

2. Fabrication and installation of two Paramedic Squad Utility bodies by CTEC in accordance with City specifications as outlined in Attachment "A-1".

3. Upfitting of the Vehicles by 911 Vehicle with the lighting, communications, electrical, console, graphics, and related equipment described in Attachment "A-1".

4. Inspection, testing, correction of deficiencies, title, registration with the California Department of Motor Vehicles, and delivery of the Vehicles.

Contractor shall furnish all labor, supervision, materials, equipment, tools, transportation, and other items and services to complete this Project, whether or not each item is expressly identified.

C. **TASKS AND ACTIVITIES**

Contractor shall perform or cause to be performed all tasks and activities to complete the Work described in this Exhibit "A".

1. Task 1 — Purchase of Two Chassis
   a. Purchase two new Model Year 2027 Ram 4500 Chassis Cab Big Horn 4x2 Crew Cab vehicles, with a 60-inch cab-to-axle dimension and 173.4-inch wheelbase, including all options and specifications identified in Attachment "A-1".
   b. Provide the City with written OEM order confirmation and the vehicle identification number for each chassis prior to delivery.
   c. Upon delivery of the chassis from the OEM, provide the City reasonable access to inspect the chassis before fabrication and upfitting begin.
   d. Coordinate transportation and delivery of the chassis to CTEC, 911 Vehicle, and any other approved subcontractor to complete the Project.

2. Task 2 – Truck Fabrication
   a. Fabricate **two (2) Paramedic Squad Utility bodies** in accordance with City-approved design drawings, specifications, materials, colors, products, including but not limited to AMDOR Roll-up Box Doors, as outlined in Attachment "A-1".

3. Task 3 – Lighting and Communications Upfit
   a. Install new lighting and communications systems in the Vehicles in accordance with Attachment "A-1".
   b. The upfit shall include:
      i. Base electrical system;
      ii. Emergency lighting and siren equipment;
      iii. Command and center console module;
      iv. Radio and computer equipment; and
      v. Other equipment, including the City-approved graphics package.

   Contractor shall ensure that all installed components are compatible with the chassis, truck bodies, City-supplied equipment, and all other installed systems.

4. Task 4 – Testing, Delivery, Registration, and Acceptance
   a. Upon completion of fabrication and upfitting, Contractor shall make the Vehicles available to City designated staff for the Fire and Public Works Departments at locations designated by the City for inspection and testing before City acceptance.
   b. Contractor shall, at its sole cost and expense, promptly correct any defect, deficiency, damage, or nonconforming work identified during inspection or testing.

1. Contractor shall deliver the Vehicles to the City with good title, free and clear of liens and encumbrances, together with all documents required for title and registration with the California Department of Motor Vehicles and issuance of California exempt license plates.

2. City acceptance shall occur only after:
   a. The Vehicles have been delivered to the City;
   b. The City has completed its inspection and testing;
   c. Contractor has corrected all identified deficiencies;
   d. The Vehicles conform to the requirements and specifications set forth in this Exhibit “A”; and
   e. The City has received all required title, registration, warranty, manuals, keys, and closeout documentation.

3. City acceptance shall be confirmed in writing. Inspection, testing, possession, use, or payment shall not constitute City acceptance or waive any defect, nonconformity, warranty claim, or other remedy available to the City.

4. Contractor shall provide all warranty documentation and comply with the requirements set forth in Section 33 of the Agreement.

D. **DELIVERABLES**

Contractor shall deliver:

1. The Vehicles, fully operational and conforming to the requirements and specifications set forth in this Exhibit “A”.

2. Good and transferable title to the Vehicles, free of liens and encumbrances.

3. California Department of Motor Vehicles registration and California exempt license plates.

4. All OEM, body manufacturer, equipment manufacturer, supplier, subcontractor, and Contractor warranty documentation required by Section 33.

5. Written confirmation of the delayed OEM warranty commencement date required by Section 33.

6. All operating and maintenance manuals, final approved drawings, wiring diagrams, keys, key fobs, and other documents or items required by this Exhibit “A”.

E. **PROJECT SCHEDULE**

Contractor shall complete the Project in accordance with Exhibit “B”.

The Contractor shall coordinate all work activities with the City, CTEC, 911 Vehicle, and its approved subcontractors and suppliers to meet the performance deadlines in Exhibit “B”. Contractor shall promptly notify the City of any unforeseen conditions that may affect the Project. The City may extend the Project timeline in writing at its sole discretion.

F. **PERFORMANCE REQUIREMENTS**

Contractor shall:

1. Perform all work in accordance with this Agreement, including all exhibits and attachments, City-approved design drawings, manufacturer requirements, and all applicable federal, state, and local laws, codes, and regulations.

2. Ensure that all fabrication and installation work meets applicable quality and safety standards and is completed using approved products, materials, and methods.

3. Maintain an efficient work sequence and adequate staffing to complete the Project within the time required by Exhibit “B”.

4. Coordinate City inspection and testing of the Vehicles before acceptance by the City.

5. Correct all identified deficiencies at no additional cost to the City.

City review or approval of any drawing, specification, product, material, or installation method shall not relieve Contractor of responsibility for compliance with this Agreement, system compatibility, proper fit, workmanship, or satisfactory operation of the completed Vehicles.

G. **REPORTING REQUIREMENTS**

Contractor shall:

1. Ensure that the Vehicles’ dealer provides the City with the written delayed warranty certification or authorization required by Section 33 before City acceptance.

2. Provide written OEM order confirmation and vehicle identification numbers as soon as available.

a. Submit any proposed revision to an approved design, product, material, or equipment list to the City for review and written approval before fabrication and upfit.
b. Provide vehicle registration with the California DMV and title upon final delivery to City.
c. Provide any other required closeout documents before City's acceptance.
d. Notify the City promptly of any unforeseen conditions affecting schedule or scope and obtain written authorization before performing additional work.

## H. **ROLES AND RESPONSIBILITIES**

1. Contractor Responsibilities
   a. The Contractor shall perform all tasks and activities necessary to complete the Work as described in this Exhibit "A".
   b. Contractor shall be responsible for the acts, omissions, delays, defects, and nonperformance of CTEC, 911 Vehicle, and all other subcontractors and suppliers.
   c. Contractor shall remain responsible for the custody, protection, insurance, and risk of loss or damage to the chassis and Vehicles until City acceptance.

2. City Responsibilities
   a. The City will provide the following Customer-Supplied Parts to 911 Vehicle for installation as part of the upfit:
      i. Two Motorola APX8500 all-band, single-head radios; and
      ii. Two Motorola handheld radio chargers.

      The parts are described in Attachment "A-1".

   b. The City will be available to:
      i. Participate in one pre-build meeting;
      ii. Perform chassis and pre-upfit inspections as reasonably necessary; and
      iii. Perform final inspection and testing of the completed Vehicles.

No changes to the specifications outlined in Attachment "A-1", or additional work beyond the approved Scope of Work, shall proceed without written authorization from the City Public Works Director or designee.

## ATTACHMENT “A-1”

## CONTRACTOR’S RESPONSE TO RFP NO. 2526-006, DATED JANUARY 19, 2026, AND REVISED MAY 19, 2026.

See the attached Response to RFP No. 2526-006.

# WATSONVILLE FLEET GROUP
## 490 Auto Center Drive, Watsonville, Ca 95076
## (855) 289-6572 / (626)457-5590

1/19/2026
Revised 5-19-2026

Quote ID: **RFP# 2526-006**

CITY OF REDONDO BEACH

531 N GERTRUDA AVE

REDONDO BEACH, CALIFORNIA, 90277

Dear Redondo Beach,

Watsonville Fleet Group is pleased to quote the following vehicle(s) for your consideration.
**Two (2) New/Unused (2027 Ram 4500 Chassis Cab (DP4L93) Big Horn 4x2 Crew Cab 60" CA 173.4" WB, CTEC Body and 911 Upfit Medic Squad.**

| | One Unit | Total | Extended Unit's (2) |
|---|---|---|---|
| Contract Price | $77,087.00 | | $154,174.00 |
| CTEC Body and 911 Upfit Medic Squad | $183,205.00 | | $366,410.00 |
| Tax (9.7500 %) | $25,378.47 | | $50,756.94 |
| Tire fee | $12.25 | | $24.50 |
| Total | $285,682.72 | | $571,365.44 |

- per the attached specifications.

Estimated Delivery 220-180 Days ARO

Thank you in advance for your consideration. Should you have any questions, please do not hesitate to call.

Sincerely,

Kevin Buzzard
Account Manager
Email: buzzard5150@gmail.com
Office: (626) 457-5590

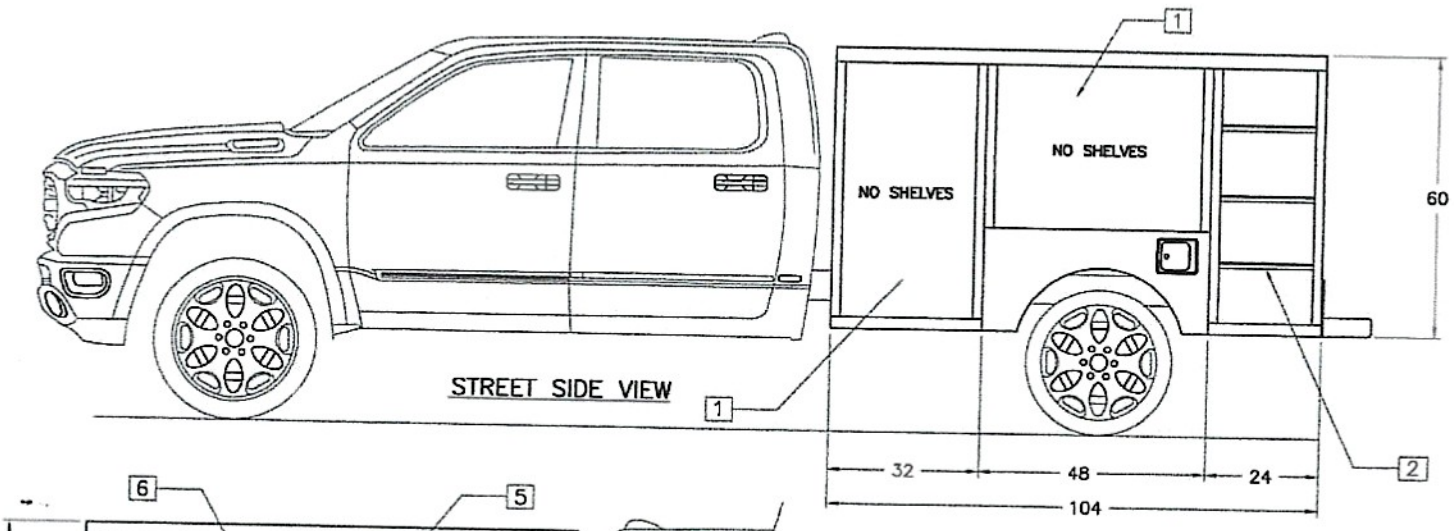


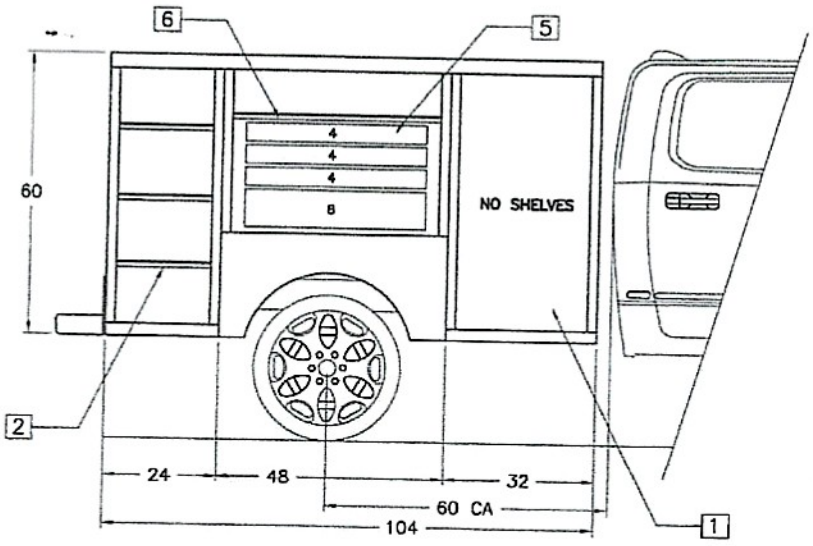


CURBSIDE VIEW

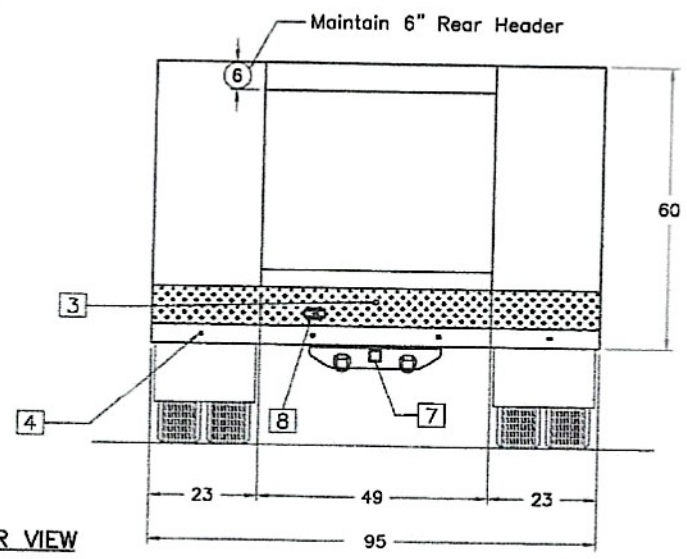


REAR VIEW

| BILL OF MATERIALS | | |
|---|---|---|
| NO. | QTY. | DESCRIPTION |
| 1. | X | NO SHELF IN COMPARTMENT |
| 2. | 3 | ADJ. SHELVES |
| 3. | 1 | BACK UP CAMERA |
| 4. | 1 | BACK UP SENSORS |
| 5. | 4 | ROLL-OUT DRAWERS (1-8" TALL, 4-3" TALL) |
| 6. | 1 | FIXED SHELF |
| 7. | 1 | CLASS V RECEIVER HITCH W/D RINGS |
| 8. | 1 | 7-4 PIN TRAILER CONNECTOR |
| | | |
| | | |
| | | NOTES: |
| | 1 | GRAY ZOLATONE INSIDE ALL COMPT. AND |
| | | DRAWER FRONT |
| | 2 | FRONT DIAMOND PLATE - FRONT END PANEL |
| | 3 | NO DOORS IN ALL COMPT. |
| | 4 | ONLY DOORS BRACKET INSTALLED BY CTEC |
| | | (8" TALL X 6" WIDE X 1-3/4" DEEP) |
| | 5 | DRAWER BRACKET - SPECIAL 4" WIDE |

| | |
|---|---|
| WORK ORDER NO : N/A | |
| CUSTOMER : REDONDO BEACH SQUAD 63 | |
| BODY TYPE : 10460-VCT-95 | |
| CHASSIS INFO : 2024 DODGE RAM 4500 ,60 CA , DRW | |
| ENGINEER : KEVAL D. | CHECKED BY : RICK A. |
| DATE : 01/14/2026 | SHEET NO : 1 |
| CUSTOMER APPROVAL : | REVISION NO: |
| DATE : SIGN : | |


CALIFORNIA TRUCK EQUIPMENT CO.
12351 Bellflower Blvd.
Downey, CA. 90242
(800) 567-2832
(562) 803-4466
FAX (562) 803-8795
www.ctec-truckbody.com



THE IDEA, CONCEPT OR DESIGN CONVEYED BY THIS DOCUMENT, SPECIFICATION, DRAWING, PRINT OR COPY IS PROPERTY OF CALIFORNIA TRUCK EQUIPMENT COMPANY, AKA CTEC. REPRODUCTION, DISTRIBUTION OR USE OTHER THAN SPECIFICALLY INTENDED MUST BE AUTHORIZED IN WRITTING FROM CALIFORNIA TRUCK EQUIPMENT COMPANY OR ITS REPRESENTATIVE.

5604 E. La Palma Ave. Anaheim, CA 92807
P: 714-808-0911 F: 714-808-0916 www.911vehicle.com

Your Single Source Provider for Emergency Vehicle Solutions

# Quote#11326-1

To: _____ From: Dan Walters

Company: Redondo Beach Fire Date: May 19, 2026

E-Mail: _____ Phone # _____

Regarding: Medic Squad Vehicle Lighting and Communications Package RAM 4500 Crew Cab 2 wheel drive

1 Number of Pages sent including cover sheet

| QTY | Breakdown with labor: | | | EXTENSION TOTAL |
|---|---|---|---|---|
| | **Vehicle and Truck Body** | | | |
| 1 | Custom Medic Squad Utility Body per Redondo Spec<br>Highway Products Bed Slide in rear center portion of box<br>AMDOR Roll Up Box Doors | | | 92,015.00 |
| | **Base Electrical System** | | | |
| 1 | Main DC Power / Ground Electrical Buss System | | | 1,740.00 |
| 2 | Odyssey 94R Drycell Batteries underhood | | | 1,300.00 |
| 1 | Odyssey 48-720 Drycell Batteries in Service Body for MDC | | | 835.00 |
| 1 | In Floor Battery Boxes | | | 1,217.00 |
| 1 | 2G Power and Ground Cable for Isolated Battery | | | 1,185.00 |
| 1 | Auto Isolator for Dual Battery System | | | 1,115.00 |
| 1 | 911V-Mux Vehicle Load Manager | | | 3,265.00 |
| 1 | Key Ignition Control System | | | 270.00 |
| 1 | Park Nuetral Control System | | | 320.00 |
| | **Emergency Lighting and Siren Equipment** | | | |
| 1 | Code 3 Z3SXP-1 Siren and Lighting Controller in Console | | | 3,045.00 |
| 1 | Code 3 2700 Lightbar with Dual Mode LED's | | | 6,175.00 |
| 1 | Headlight Flasher | | | 555.00 |
| 2 | L.E.D. Lights mounted under side view mirrors | | | 1,310.00 |
| 2 | Whelen M7R Grill Lights (Red) | | | 1,510.00 |
| 2 | Whelen M7R Side Fender LED's (Red) | | | 1,725.00 |
| 2 | Whelen M7R LED's mounted on Side of Truck Body | | | 1,295.00 |
| 1 | Arrowstick - Mega Thin MTS835MC-AW mounted on rear of roof | | | 2,120.00 |
| 2 | Siren speakers mounted behind grill C3900U | | | 1,355.00 |
| 1 | Back-up Alarm with Override Switch (On/Off) | | | 508.00 |
| 2 | Whelen M6 Scene Lights on Rear of Truck Body with Bezel | | | 1,435.00 |
| 2 | Whelen M6R Red Lights in Bezel on Rear of Truck Body | | | 1,195.00 |
| 2 | Whelen M6 4 Position Chrome Vertical Bezel for Lights | | | 1,195.00 |
| 2 | Whelen M6A Amber Lights with Bezel on Rear of Truck Body | | | 1,195.00 |
| 2 | Whelen M6 Chevron Arrow Turn Signals mounting in Vertical Bezel | | | 1,001.00 |
| 2 | Whelen M6 Brake/Running Lights mounted in vertical bezel | | | 1,065.00 |
| 2 | Whelen M6 Reverse Lights Mounted in Vertical Bezel | | | 1,135.00 |
| 1 | Air Horn with Compressor and Tank with Foot Switch (Driver Side) | | | 1,455.00 |
| 2 | Whelen Pioneer Flood Lights with surface mount | | | 7,710.00 |
| | **Command and Center Console Module** | | | |
| 1 | Metal Center Console for Radios and Lighting Controller | | | 1,855.00 |
| 1 | AC-FHDFB Storage Box behind widebody console | | | 1,225.00 |
| 2 | Arm rests mounted on each side of the console | | | 393.00 |
| 1 | Communications Cabinet under Rear Seat | | | 1,240.00 |
| | **Radio and Computer Equipment** | | | |
| 2 | Motorola APX8500 All Band Single Head Radios (CS) | | | 3,160.00 |
| 1 | 911Vehicle Intercom 4 PTT Stations 2 Radio TX | | | 3,345.00 |
| 2 | Mobile Radio Intercom Interfaces | | | 1,410.00 |
| 2 | 911Vehicle OTH-10CF Headsets | | | 710.00 |
| 1 | X-Naut Mount for iPad 13 Pro M4 with fans | | | 2,457.00 |
| 1 | Heavy Duty Side Pole Mount for MDC | | | 995.00 |
| 2 | Motorola Handheld Radio Chargers flush in console (CS) | | | 580.00 |
| 3 | Roof Mounted Antennas | | | 1,235.00 |
| 1 | 3-1 Multi-Band WiFi Antenna for Motorola OTA Programming | | | 602.00 |
| | **Other Equipment** | | | |
| 1 | Misc. Parts and Materials (Loom, Connectors, Etc.) | | | 645.00 |
| 1 | 20 Amp Auto Eject Inlet for Battery Charger w/ LED | | | 1,100.00 |
| 1 | Auto Interlock Relay to allow for Dual Auto Eject Inputs | | | 685.00 |
| 1 | Second 20 Amp Auto Eject Inlet on Passenger Side for Battery Charger w/ LED | | | 1,100.00 |
| 2 | LED Indicator LEDs on Shore Power Inlet | | | 500.00 |
| 1 | 40 Amp Battery Charger - L1 lower front panel | | | 1,222.00 |
| 2 | LED Lights under rear bumper on in reverse and button on Controller | | | 700.00 |
| 1 | Remote Door Unlock Swith in Grill | | | 565.00 |
| 2 | Dual USB-C Sockets with Rubber Cover | | | 520.00 |
| 7 | Magnetic Door Switches Installed on all Compartment Doors | | | 2,745.00 |
| 1 | LED Light on Console for Compartment Open Warning & Buzzer | | | 1,035.00 |
| 1 | Rear Storage Box on Bed Slide per Redondo Beach Design | | | 5,150.00 |
| 1 | Graphics installed per Redondo Beach Fire Spec | | | 6,250.00 |
| 1 | Live View Rear Camera System | | | 1,535.00 |

(CS) = Customer Supplied Parts

| | |
|---|---|
| **SUBTOTALS** | **$ 183,205.00** |
| **SALES TAX** | **$ -** |
| **TOTAL** | **$ 183,205.00** |

All Quotes are Per Vehicle and Valid for 120 Days

All line items include parts and labor unless identified with (CS)

# Vehicle Configuration Options

| ENGINE | |
|---|---|
| **Code** | **Description** |
| ETN | Engine: 6.7L I6 Cummins Turbo Diesel, -inc: Selective Catalytic Reduction (Urea), Dual 730 Amp Maintenance Free Batteries, Clean Idle Emissions Label, Cummins Turbo Diesel Badge, Current Generation Engine Controller, Smart Diesel Exhaust Brake, Supplemental Heater, B-20 Bio Diesel Capability |

| TRANSMISSION | |
|---|---|
| **Code** | **Description** |
| DFM | Transmission: 8-Speed TorqueFlite HD Automatic (DFM) |

| WHEELS | |
|---|---|
| **Code** | **Description** |
| WP4 | Wheels: 19.5" x 6.0" Forged Aluminum Polished, -inc: Center Hub |

| TIRES | |
|---|---|
| **Code** | **Description** |
| TAJ | Tires: 225/70R19.5G FT All Position, RR Traction, -inc: Hankook Brand Tires |

| PRIMARY PAINT | |
|---|---|
| **Code** | **Description** |
| PR4 | Flame Red Clearcoat |

| SEAT TYPE | |
|---|---|
| **Code** | **Description** |
| V9X9 | Black, Cloth 40/20/40 Bench Seat, -inc: 4 Way Front Headrests |

| ADDITIONAL EQUIPMENT | |
|---|---|
| **Code** | **Description** |
| NAS | 50 State Emissions |
| XF1 | Dual Alternators Rated at 480 Amps |
| TBB | Full Size Spare Tire, -inc: 19.5" Steel Spare Wheel |
| MDA | Front License Plate Bracket |
| MRT | Chrome Tubular Side Steps |
| XNR | Manual DPF Regeneration |
| XCH | 2 Additional Key Fobs |
| XAC | ParkView Rear Back Up Camera |
| XAA | ParkSense Rear Park Assist System |

| GVWR | |
|---|---|
| **Code** | **Description** |
| Z4A | GVWR: 16,500 lbs, (STD) |

| CPOS PKG | |
|---|---|
| **Code** | **Description** |
| 25Z | Quick Order Package 25Z Big Horn, -inc: Engine: 6.7L I6 Cummins Turbo Diesel, Transmission: 8-Speed TorqueFlite HD Automatic (DFM), Black-Out Tape, Tinted Acoustic Windshield Glass, Exterior Mirrors w/Heating Element, Chrome Grille Surround, Trailer Light Check, Painted I/P Bezels w/Hydrographics, Mirror Running Lights, Premium Vinyl Door Trim w/Map Pocket, RAM Door Badges, Power-Adjustable Convex Aux Mirrors, Mirror Power Heat Fold Telescope Black, Exterior Mirrors w/Supplemental Signals, Body Insulation, Exterior Mirrors Courtesy Lamps, Passenger Sun Visor w/Illuminated Mirror, Matte Black Mesh Grille w/Chrome, Center Hub, Satin Chrome Key Fob, Acoustic Front Door Glass, Power Adjust Mirrors, Traveler/Mini Trip Computer, Bright Front Bumper |

# ~~2026~~ 2027 Fleet/Non-Retail Ram 4500 Chassis Cab Big Horn 4x2 Crew Cab 60" CA 173.4" WB

## *WINDOW STICKER*

~~2026~~ 2027 Ram 4500 Chassis Cab Big Horn 4x2 Crew Cab 60" CA 173.4" WB

| CODE | MODEL | MSRP |
|---|---|---|
| DP4L93 | ~~2026~~ 2027 Ram 4500 Chassis Cab Big Horn 4x2 Crew Cab 60" CA 173.4" WB | $59,015.00 |
| | **OPTIONS** | |
| ETN | Engine: 6.7L I6 Cummins Turbo Diesel, -inc: Selective Catalytic Reduction (Urea), Dual 730 Amp Maintenance Free Batteries, Clean Idle Emissions Label, Cummins Turbo Diesel Badge, Current Generation Engine Controller, Smart Diesel Exhaust Brake, Supplemental Heater, B-20 Bio Diesel Capability | $9,995.00 |
| DFM | Transmission: 8-Speed TorqueFlite HD Automatic (DFM) | $1,000.00 |
| WP4 | Wheels: 19.5" x 6.0" Forged Aluminum Polished, -inc: Center Hub | $1,195.00 |
| TAJ | Tires: 225/70R19.5G FT All Position, RR Traction, -inc: Hankook Brand Tires | $250.00 |
| PR4 | Flame Red Clearcoat | $0.00 |
| V9X9 | Black, Cloth 40/20/40 Bench Seat, -inc: 4 Way Front Headrests | $0.00 |
| NAS | 50 State Emissions | $0.00 |
| XF1 | Dual Alternators Rated at 480 Amps | $495.00 |
| TBB | Full Size Spare Tire, -inc: 19.5" Steel Spare Wheel | $395.00 |
| MDA | Front License Plate Bracket | $0.00 |
| MRT | Chrome Tubular Side Steps | $665.00 |
| XNR | Manual DPF Regeneration | $345.00 |
| XCH | 2 Additional Key Fobs | $275.00 |
| XAC | ParkView Rear Back Up Camera | $495.00 |
| XAA | ParkSense Rear Park Assist System | $295.00 |
| Z4A | GVWR: 16,500 lbs, (STD) | $0.00 |
| 25Z | Quick Order Package 25Z Big Horn, -inc: Engine: 6.7L I6 Cummins Turbo Diesel, Transmission: 8-Speed TorqueFlite HD Automatic (DFM), Black-Out Tape, Tinted Acoustic Windshield Glass, Exterior Mirrors w/Heating Element, Chrome Grille Surround, Trailer Light Check, Painted I/P Bezels w/Hydrographics, Mirror Running Lights, Premium Vinyl Door Trim w/Map Pocket, RAM Door Badges, Power-Adjustable Convex Aux Mirrors, Mirror Power Heat Fold Telescope Black, Exterior Mirrors w/Supplemental Signals, Body Insulation, Exterior Mirrors Courtesy Lamps, Passenger Sun Visor w/Illuminated Mirror, Matte Black Mesh Grille w/Chrome, Center Hub, Satin Chrome Key Fob, Acoustic Front Door Glass, Power Adjust Mirrors, Traveler/Mini Trip Computer, Bright Front Bumper | $2,995.00 |

Please note selected options override standard equipment

| | |
|---|---|
| **SUBTOTAL** | **$77,415.00** |
| Advert/ Adjustments | $0.00 |
| Manufacturer Destination Charge | $2,595.00 |
| **TOTAL PRICE** | **$80,010.00** |

Est City: N/A MPG
Est Highway: N/A MPG
Est Highway Cruising Range: N/A mi

Any performance-related calculations are offered solely as guidelines. Actual unit performance will depend on your operating conditions.

## Notes

## Standard Equipment

### MECHANICAL

| |
|---|
| Engine: 6.4L V8 HEMI HD (STD) |
| Transmission: 8-Speed TorqueFlite HD Automatic (DFZ) (STD) |
| GVWR: 16,500 lbs (STD) |

### EXTERIOR

| |
|---|
| Wheels: 19.5" x 6.0" Steel (STD) |
| Tires: 225/70R19.5G All Position (STD) |

### ADDITIONAL EQUIPMENT

| |
|---|
| Heavy Duty Truck Federal Emissions |
| Transmission w/Driver Selectable Mode and Oil Cooler |
| Power Take-Off Right/Left |
| Rear-Wheel Drive |
| 4.44 Axle Ratio |
| Engine Oil Cooler |
| 730CCA Maintenance-Free Battery w/Run Down Protection |
| 220 Amp Alternator |
| Towing Equipment -inc: Trailer Sway Control |
| Trailer Wiring Harness |
| Trailer Brake Control -inc: Trailer Light Check |
| 8910# Maximum Payload |
| HD Gas-Pressurized Shock Absorbers |
| Front Anti-Roll Bar and Rear HD Anti-Roll Bar |
| Hydraulic Power-Assist Steering |
| 52 Gal. Fuel Tank |
| Single Stainless Steel Exhaust |
| Dual Rear Wheels |
| Leading Link Front Suspension w/Coil Springs |
| Solid Axle Rear Suspension w/Leaf Springs |
| 4-Wheel Disc Brakes w/4-Wheel ABS, Front And Rear Vented Discs |
| Upfitter Switches |
| Mechanical Limited Slip Differential |
| Wheels w/Hub Covers |
| Front Bumper w/2 Tow Hooks |
| Black Fender Flares |

| |
|---|
| Black Side Windows Trim and Black Front Windshield Trim |
| Black Door Handles |
| Exterior Mirrors w/Clearance Lights |
| Black Exterior Mirrors |
| Manual Telescoping Mirrors |
| Manual Folding Exterior Mirrors |
| Fixed Rear Window |
| Light Tinted Glass |
| Variable Intermittent Wipers |
| Galvanized Steel/Aluminum Panels |
| Auto On/Off Reflector Led Low/High Beam Daytime Running Headlamps w/Delay-Off |
| Front Fog Lamps |
| Cab Clearance Lights |
| Laminated Glass |
| Radio w/Seek-Scan, Clock, Speed Compensated Volume Control, Aux Audio Input Jack, Voice Activation, Radio Data System and External Memory Control |
| Radio: Uconnect 5 w/8.4" Display |
| 6 Speakers |
| Streaming Audio |
| Integrated Roof Antenna |
| GPS Antenna Input |
| 2 LCD Monitors In The Front |
| 40-20-40 Bench Folding Driver Seat w/4 Way Direction Control -inc: Manual Fore/Aft and Adjustable Headrest |
| Driver Seat |
| Manual Adjust 4-Way Driver Seat |
| 40-20-40 Bench Folding Passenger Seat w/4 Way Direction Control -inc: Manual Fore/Aft and Adjustable Headrest |
| Passenger Seat |
| Manual Adjust 4-Way Front Passenger Seat |
| Front Facing Rear Seat |
| Manual Tilt Steering Column |
| Gauges -inc: Speedometer, Odometer, Voltmeter, Oil Pressure, Engine Coolant Temp, Tachometer, Oil Temperature, Transmission Fluid Temp, Engine Hour Meter and Trip Odometer |
| Power Rear Windows |
| Voice Recorder |
| Rear Folding Seat |
| Illuminated Front Cupholder |
| Rear Cupholder |
| Proximity Key For Push Button Start Only |
| Valet Function |

| |
|---|
| Remote Keyless Entry w/Integrated Key Transmitter, Illuminated Entry and Panic Button |
| Cruise Control w/Steering Wheel Controls |
| Adaptive Cruise Control |
| Manual Air Conditioning |
| HVAC -inc: Underseat Ducts |
| Glove Box |
| Interior Trim -inc: Deluxe Sound Insulation and Chrome/Metal-Look Interior Accents |
| Full Cloth Headliner |
| Urethane Gear Shifter Material |
| Day-Night Rearview Mirror |
| Passenger Visor Vanity Mirror |
| Mini Overhead Console and 2 12V DC Power Outlets |
| Front Map Lights |
| Fade-To-Off Interior Lighting |
| Full Vinyl/Rubber Floor Covering |
| Storage Tray |
| FOB Controls -inc: Keyfob Remote Start |
| Smart Device Remote Engine Start |
| RAM Connect Tracker System |
| Global Telematics Box Module (TBM) |
| Google Android Auto |
| Apple CarPlay |
| Remote USB Port - Charge Only |
| 4G LTE Wi-Fi Hot Spot |
| Integrated Voice Command w/Bluetooth |
| Connectivity - US/Canada |
| For Details, Visit DriveUconnect.com |
| Instrument Panel Bin, Dashboard Storage, Driver / Passenger And Rear Door Bins and 2nd Row Underseat Storage |
| Delayed Accessory Power |
| Power 1st Row Windows w/Driver And Passenger 1-Touch Up/Down |
| Power Door Locks w/Autolock Feature |
| Driver Information Center |
| Redundant Digital Speedometer |
| Analog Appearance |
| Temperature & Compass Gauge |
| Manual Adjustable Front Head Restraints |
| Armrests w/Storage |
| 40/20/40 Split Bench Seat |
| Front Armrest w/Cupholders |
| 2 Way Rear Headrest Seat |

| |
|---|
| Sentry Key Immobilizer |
| 2 12V DC Power Outlets |
| Air Filtration |
| Electronic Stability Control (ESC) |
| ABS And Driveline Traction Control |
| Side Impact Beams |
| RAM Connect Emergency Sos Capability |
| Forward Collision Warning-Plus |
| Collision Mitigation-Front |
| Dual Stage Driver And Passenger Front Airbags |
| Airbag Occupancy Sensor |
| Rear Child Safety Locks |
| Outboard Front Lap And Shoulder Safety Belts -inc: Rear Center 3 Point, Height Adjusters and Pretensioners |

## EXHIBIT "B"

## TERM AND TIME OF COMPLETION

**TERM**. This Agreement shall commence on August 4, 2026 and shall continue through August 3, 2029, unless otherwise terminated as herein provided.

**PERFORMANCE SCHEDULE.** Unless otherwise approved in writing by the City Public Works Director or designee, the Project timeline shall be as follows:

A. **August to September 2026:** Contractor shall order the chassis for the Vehicles.

B. **January 17, 2027:** On or before January 17, 2027 the Contractor shall provide the City with a written Project status update identifying:

   1. Chassis order and production status;
   2. Chassis delivery status;
   3. Fabrication and upfit status;
   4. Any known or anticipated delay; and
   5. The anticipated date the completed Vehicles will be made available to the City for inspection.

C. **May 11, 2027:** On or before May 11, 2027, Contractor shall complete the Work and make the Vehicles available to the City for inspection and testing.

Any request for an extension shall be submitted to the City in writing as soon as Contractor becomes aware of the circumstances supporting the request. Submission of an extension request shall not extend any deadline. An extension shall be effective only if approved in writing by the City Public Works Director or designee.

## EXHIBIT "C"

## COMPENSATION

Provided Contractor is not in default under this Agreement, Contractor shall be compensated as provided below.

A. **AMOUNT.** Contractor shall be paid a fixed fee of $571,365.44 for all the work described in Exhibit “A”.

B. **NOT TO EXCEED AMOUNT.** In no event shall the total amount paid to the Contractor, for this Project, exceed $571,365.44 during the term of this Agreement.

C. **METHOD OF PAYMENT.** Contractor shall submit invoices as follows:

1. **Initial Chassis Invoice:** Contractor shall submit an initial invoice in the amount of $169,205.96 after:

   a. Both chassis have been delivered by the OEM;
   b. The City has been given a reasonable opportunity to inspect both chassis;
   c. Contractor has provided the vehicle identification number for each chassis; and
   d. Contractor has provided documentation reasonably satisfactory to the City demonstrating that the chassis are new, conforming, free of liens and encumbrances, and the City is identified as the owner of the chassis on title and registration documents.

   The initial payment shall not constitute acceptance of the chassis or the completed Vehicles.

2. **Final Invoice:** Contractor shall submit a final invoice for the remaining contract balance of $402,159.48 after City acceptance of the Vehicles. No additional charge, subcontractor markup, escalation, fee, or reimbursement shall be payable unless expressly authorized in advance by a written amendment.

3. Each invoice shall identify, as applicable:

   a. The applicable payment milestone;
   b. The dates of performance or delivery;
   c. The task or work performed;
   d. The corresponding Vehicle or vehicle identification number;
   e. A description of the applicable parts, equipment, or hardware;
   f. The amount invoiced; and
   g. The total amount previously paid and remaining under the Agreement; and
   h. If applicable, attach invoices for City preapproved subcontractors and any markup authorized by a written amendment.

Invoices must be itemized, adequately detailed, based on accurate records, and, if approved, attach subcontractor invoices. Invoices must be in a form reasonably satisfactory to the City. Contractor may be required to provide backup material upon request.

D. **SCHEDULE FOR PAYMENT.** The City will pay each properly submitted and undisputed invoice within 45 days after receipt, provided that the applicable payment conditions set forth in this Exhibit "C" have been satisfied. Final payment shall not be due before City's written acceptance of the Vehicles.

E. **RIGHT TO WITHHOLD AMOUNTS.** The City may withhold any payments, or portion thereof, that the City disputes in good faith until the dispute is resolved, to the maximum extent permitted by law.

F. **NOTICE.** Written notices to City and Contractor shall be given by registered or certified mail, postage prepaid, email, or personally served, and addressed to the following parties.

Contractor: Watsonville Fleet Group
409 Auto Center Drive
Watsonville, CA 95076
Attention: Kevin Buzzard
Email: buzzard5150@gmail.com

City: City of Redondo Beach
Public Works
531 N. Gertruda Ave.
Redondo Beach, CA 90277
Attention: Andrea Delap
Email: Andrea.Delap@redondo.org

All notices, including notices of address changes, provided under this Agreement are deemed received as follows: (1) on the second business day after emailing, provided that no "bounce-back" or similar message indicating non-delivery is received; (2) on the third day after mailing if sent by registered or certified mail; or (3) upon personal delivery. Changes in the respective address set forth above may be made from time to time by any party upon written notice to the other party in accordance with this section.

## EXHIBIT "D"

## INSURANCE REQUIREMENTS FOR CONTRACTORS

Without limiting Contractor's indemnification obligations under this Agreement, Contractor shall procure and maintain for the duration of the contract insurance against claims for injuries to persons or damages to property which may arise from or in connection with the performance of the work hereunder by the Contractor, its agents, representatives, or employees.

Minimum Scope of Insurance

Coverage shall be at least as broad as:

Insurance Services Office Commercial General Liability coverage (occurrence form CG 0001).

Insurance Services Office form number CA 0001 (Ed. 1/87) covering Automobile Liability, code 1 (any auto).

Workers' Compensation insurance as required by the State of California.

Employer's Liability Insurance.

Minimum Limits of Insurance

Contractor shall maintain limits no less than:

General Liability: $2,000,000 per occurrence for bodily injury, personal injury and property damage. The general aggregate limit of $4,000,000 shall apply separately to this project.

Automobile Liability: $1,000,000 per accident for bodily injury and property damage.

Employer's Liability: $1,000,000 per accident for bodily injury or disease.

Deductibles and Self-Insured Retentions

Any deductibles or self-insured retentions must be declared to and approved by the City. At the option of the City, either: (1) the insurer shall reduce or eliminate such deductibles or self-insured retentions as respects the City, its officers, officials, employees and volunteers or (2) the Contractor shall provide a financial guarantee satisfactory to the City guaranteeing payment of losses and related investigations, claim administration and defense expenses.

Other Insurance Provisions

The general liability and automobile liability policies shall contain, or be endorsed to contain, the following provisions:

Additional Insured Endorsement:

General Liability: The City, its officers, elected and appointed officials, employees, and volunteers shall be covered as insureds with respect to liability arising out of work performed by or on behalf of the Contractor. General liability coverage can be provided in the form of an endorsement to the Contractor's insurance, or as a separate owner's policy.

Automobile Liability: The City, its officers, elected and appointed officials, employees, and volunteers shall be covered as insureds with respect to liability arising out of automobiles owned, leased, hired or borrowed by or on behalf of the Contractor.

For any claims related to this project, the Contractor's insurance coverage shall be primary insurance as respects the City, its officers, elected and appointed officials, employees, and volunteers. Any insurance or self-insurance maintained by the City, its officers, officials, employees, or volunteers shall be excess of the Contractor's insurance and shall not contribute with it.

Each insurance policy required by this clause shall be endorsed to state that coverage shall not be canceled by either party, except after thirty (30) days prior written notice by certified mail, return receipt requested, has been given to the City.

Each insurance policy shall be endorsed to state that the inclusion of more than one insured shall not operate to impair the rights of one insured against another insured, and the coverages afforded shall apply as though separate policies had been issued to each insured.

Each insurance policy shall be in effect prior to awarding the contract and each insurance policy or a successor policy shall be in effect for the duration of the project. The maintenance of proper insurance coverage is a material element of the contract and failure to maintain or renew coverage or to provide evidence of renewal may be treated by the City as a material breach of contract on the Contractor's part.

Acceptability of Insurers

Insurance shall be placed with insurers with a current A.M. Best's rating of no less than A:VII and which are authorized to transact insurance business in the State of California by the Department of Insurance.

Verification of Coverage

Contractor shall furnish the City with original certificates and amendatory endorsements effecting coverage required by this clause. The endorsements should be on the City authorized forms provided with the contract specifications. Standard ISO forms which shall be subject to City approval and amended to conform to the City's requirements may be acceptable in lieu of City authorized forms. All certificates and endorsements shall be received and approved by the City before the contract is awarded. The City reserves the right to require complete, certified copies of all required insurance policies, including endorsements effecting the coverage required by these specifications at any time.

Subcontractors

Contractor shall include all subcontractors as insured under its policies or shall furnish separate certificates and endorsements for each subcontractor. All coverages for subcontractors shall be subject to all of the requirements stated herein.

Risk Management

Contractor acknowledges that insurance underwriting standards and practices are subject to change, and the City reserves the right to make changes to these provisions in the reasonable discretion of its Risk Manager.

## EXHIBIT "E"

## AGREEMENT TO COMPLY WITH CALIFORNIA LABOR LAW REQUIREMENTS

1. Contractor acknowledges that the project as defined in this Agreement is a "public work" as defined in Division 2, Part 7, Chapter 1 (commencing with Section 1720) of the California Labor Code ("Chapter 1"), and that this Agreement is subject to (a) Chapter 1, including without limitation Labor Code Section 1771 and (b) the rules and regulations established by the Director of Industrial Relations ("DIR") implementing such statutes. Contractor shall perform all work on the project as a public work. Contractor shall comply with and be bound by all the terms, rules and regulations described in 1(a) and 1(b) as though set forth in full herein.

2. California law requires the inclusion of specific Labor Code provisions in certain contracts. The inclusion of such specific provisions below, whether or not required by California law, does not alter the meaning or scope of Section 1 above.

3. Pursuant to Labor Code Section 1771.4, Contractor shall post job site notices, as prescribed by regulation.

4. Pursuant to Labor Code Section 1773.2, copies of the prevailing rate of per diem wages for each craft, classification, or type of worker needed to perform the Agreement are on file at City Hall and will be made available to any interested party on request. Contractor acknowledges receipt of a copy of the DIR determination of such prevailing rate of per diem wages, and Contractor shall post such rates at each job site covered by this Agreement.

5. Contractor shall comply with and be bound by the provisions of Labor Code Sections 1774 and 1775 concerning the payment of prevailing rates of wages to workers and the penalties for failure to pay prevailing wages. The Contractor shall, as a penalty to the City, forfeit the maximum amount allowable by law for each calendar day, or portion thereof, for each worker paid less than the prevailing rates as determined by the DIR for the work or craft in which the worker is employed for any public work done pursuant to this Agreement by Contractor or by any subcontractor.

6. Contractor shall comply with and be bound by the provisions of Labor Code Section 1776, which requires Contractor and each subcontractor to (1) keep accurate payroll records and verify such records in writing under penalty of perjury, as specified in Section 1776, (2) certify and make such payroll records available for inspection as provided by Section 1776, and (3) inform the City of the location of the records.

7. Contractor shall comply with and be bound by the provisions of Labor Code Sections 1777.5, 1777.6 and 1777.7 and California Administrative Code title 8, section 200 *et seq*. concerning the employment of apprentices on public works projects. Contractor shall be responsible for compliance with these aforementioned Sections for all apprenticeable occupations. Prior to commencing work under this Agreement, Contractor shall provide City with a copy of the information submitted to any applicable apprenticeship program. Within sixty (60) days after concluding work pursuant to this Agreement, Contractor and each of its subcontractors shall submit to the City a verified statement of the journeyman and apprentice hours performed under this Agreement.

8. Contractor acknowledges that eight (8) hours labor constitutes a legal day's work. Contractor shall comply with and be bound by Labor Code Section 1810. Contractor shall comply with and be bound by the provisions of Labor Code Section 1813 concerning penalties for workers who work excess hours. The Contractor shall, as a penalty to the City, forfeit twenty-five dollars ($25) for each worker employed in the performance of this Agreement by the Contractor or by any subcontractor for each calendar day during which such worker is required or permitted to work more than eight (8) hours in any one (1) calendar day and forty (40) hours in any one calendar week in violation of the provisions of Division 2, Part 7, Chapter 1, Article 3 of the Labor Code. Pursuant to Labor Code section 1815, work performed by employees of Contractor in excess of 8 hours per day, and 40 hours during any one week shall be permitted upon public work upon compensation for all hours worked in excess of 8 hours per day at not less than 1 and 1/2 times the basic rate of pay.

9. California Labor Code Sections 1860 and 3700 provide that every employer will be required to secure the payment of compensation to its employees. In accordance with the provisions of California Labor Code Section 1861, Contractor hereby certifies as follows:

> "I am aware of the provisions of Section 3700 of the Labor Code which require every employer to be insured against liability for workers' compensation or to undertake self-insurance in accordance with the provisions of that code, and I will comply with such provisions before commencing the performance of the work of this contract."

10. For every subcontractor who will perform work on the project, Contractor shall be responsible for such subcontractor's compliance with Chapter 1 and Labor Code Sections 1860 and 3700, and Contractor shall include in the written contract between it and each subcontractor a copy of those statutory provisions and a requirement that each subcontractor shall comply with those statutory provisions. Contractor shall be required to take all actions necessary to enforce such contractual provisions and ensure subcontractor's compliance, including without limitation, conducting a periodic review of the certified payroll records of the subcontractor and upon becoming aware of the failure of the subcontractor to pay his or her workers the specified prevailing rate of wages. Contractor shall diligently take corrective action to halt or rectify any failure.

11. To the maximum extent permitted by law, Contractor shall indemnify, hold harmless, and defend (at Contractor's expense with counsel acceptable to the City) the City, its officials, officers, employees, agents, independent contractors, and volunteers from and against any demand or claim for damages, compensation, fines, penalties, or other amounts arising out of or incidental to any acts or omissions listed in this Exhibit "E" by any person or entity (including Contractor, its subcontractors, and each of their officials, officers, employees, and agents) in connection with any work undertaken or in connection with the Agreement, including without limitation the payment of all consequential damages, attorneys' fees, and other related costs and expenses, except for such loss or damage which was caused by the sole negligence or willful misconduct of the City. This indemnification obligation shall survive the termination of the Agreement.

# CERTIFICATE OF LIABILITY INSURANCE

DATE(MM/DD/YYYY) 7/15/2026

THIS CERTIFICATE IS ISSUED AS A MATTER OF INFORMATION ONLY AND CONFERS NO RIGHTS UPON THE CERTIFICATE HOLDER. THIS CERTIFICATE DOES NOT AFFIRMATIVELY OR NEGATIVELY AMEND, EXTEND OR ALTER THE COVERAGE AFFORDED BY THE POLICIES BELOW. THIS CERTIFICATE OF INSURANCE DOES NOT CONSTITUTE A CONTRACT BETWEEN THE ISSUING INSURER(S), AUTHORIZED REPRESENTATIVE OR PRODUCER, AND THE CERTIFICATE HOLDER.

IMPORTANT: If the certificate holder is an ADDITIONAL INSURED, the policy(ies) must have ADDITIONAL INSURED provisions or be endorsed. If SUBROGATION IS WAIVED, subject to the terms and conditions of the policy, certain policies may require an endorsement. A statement on this certificate does not confer rights to the certificate holder in lieu of such endorsement(s).

PRODUCER
SPEED INSURANCE AGENCY
1000 Town Center Dr #570
Oxnard, CA 93036
0703573

CONTACT NAME:
PHONE (A/C, No, Ext): (805)278-2511 FAX (A/C, No):
E-MAIL ADDRESS: suzanne@speedagency.net

| INSURER(S) AFFORDING COVERAGE | NAIC # |
|---|---|
| INSURER A: American Auto Ins Co | 21849 |
| INSURER B: Interstate Fire & Casualty | 22829 |
| INSURER C: State Compensation Insurance Fund | 35076 |
| INSURER D: Houston Casualty | 42374 |
| INSURER E: | |
| INSURER F: | |

INSURED
72 Hour LLC
dba:National Truck Sales & Service
c/o Watsonville Auto Group
490 Auto Center Dr
Watsonville, CA 95076

COVERAGES CERTIFICATE NUMBER: REVISION NUMBER:

THIS IS TO CERTIFY THAT THE POLICIES OF INSURANCE LISTED BELOW HAVE BEEN ISSUED TO THE INSURED NAMED ABOVE FOR THE POLICY PERIOD INDICATED. NOTWITHSTANDING ANY REQUIREMENT, TERM OR CONDITION OF ANY CONTRACT OR OTHER DOCUMENT WITH RESPECT TO WHICH THIS CERTIFICATE MAY BE ISSUED OR MAY PERTAIN, THE INSURANCE AFFORDED BY THE POLICIES DESCRIBED HEREIN IS SUBJECT TO ALL THE TERMS, EXCLUSIONS AND CONDITIONS OF SUCH POLICIES. LIMITS SHOWN MAY HAVE BEEN REDUCED BY PAID CLAIMS.

| INSR LTR | TYPE OF INSURANCE | ADDL INSD | SUBR WVD | POLICY NUMBER | POLICY EFF (MM/DD/YYYY) | POLICY EXP (MM/DD/YYYY) | LIMITS | |
|---|---|---|---|---|---|---|---|---|
| A | X COMMERCIAL GENERAL LIABILITY<br>CLAIMS-MADE X OCCUR<br>X Garage Liability<br>X Ded 2500<br>GEN'L AGGREGATE LIMIT APPLIES PER:<br>X POLICY PRO-JECT LOC<br>OTHER: | | | MXA075025-0036 | 01/09/2026 | 01/09/2027 | EACH OCCURRENCE<br>DAMAGE TO RENTED PREMISES (Ea occurrence)<br>MED EXP (Any one person)<br>PERSONAL & ADV INJURY<br>GENERAL AGGREGATE<br>PRODUCTS - COMP/OP AGG | $ 1,000,000<br>$ 100,000<br>$ 2,000<br>$ 1,000,000<br>$ 3,000,000<br>$ 1,000,000<br>$ |
| A | AUTOMOBILE LIABILITY<br>X ANY AUTO<br>OWNED AUTOS ONLY<br>HIRED AUTOS ONLY<br>SCHEDULED AUTOS<br>NON-OWNED AUTOS ONLY<br>X Ded 2500 | | | MXA075025-0036 | 01/09/2026 | 01/09/2027 | COMBINED SINGLE LIMIT (Ea accident)<br>BODILY INJURY (Per person)<br>BODILY INJURY (Per accident)<br>PROPERTY DAMAGE (Per accident) | $ 1,000,000<br>$<br>$<br>$<br>$ |
| A | X UMBRELLA LIAB X OCCUR<br>EXCESS LIAB CLAIMS-MADE<br>DED X RETENTION $ 10,000 | | | CGU071326-0009 | 01/09/2026 | 01/09/2027 | EACH OCCURRENCE<br>AGGREGATE | $ 5,000,000<br>$ 10,000,000<br>$ |
| C | WORKERS COMPENSATION AND EMPLOYERS' LIABILITY<br>ANY PROPRIETOR/PARTNER/EXECUTIVE OFFICER/MEMBER EXCLUDED? Y/N<br>(Mandatory in NH)<br>If yes, describe under DESCRIPTION OF OPERATIONS below | N/A | | 9392846-2026 | 01/01/2026 | 01/01/2027 | X PER STATUTE OTH-ER<br>E.L. EACH ACCIDENT<br>E.L. DISEASE - EA EMPLOYEE<br>E.L. DISEASE - POLICY LIMIT | <br>$ 1,000,000<br>$ 1,000,000<br>$ 1,000,000 |
| B | Building | | | MXG07326552 06 | 01/09/2026 | 01/09/2027 | Special Form | $5,799,222 |
| B | Garagekeepers | | | MXA07384285 06 | 01/09/2026 | 01/09/2027 | Direct Primar | $1,100,000 |
| D | Cyber Liability | | | H25NGP219250-03 | 10/01/2025 | 10/01/2026 | 2,000,000 occ | 2,000,000agg |

DESCRIPTION OF OPERATIONS / LOCATIONS / VEHICLES (ACORD 101, Additional Remarks Schedule, may be attached if more space is required)

The City of Redondo Beach, its officers, elected and appointed officials, employees and volunteers are Additional Insured when required by written contract on a primary non-contributory basis with respect to liability arising out of work performed by the named insured per attached endorsements

CERTIFICATE HOLDER
City of Redondo Beach
Public Works
531 N Gertruda Ave
Redondo Beach, CA 90277

CANCELLATION
SHOULD ANY OF THE ABOVE DESCRIBED POLICIES BE CANCELLED BEFORE THE EXPIRATION DATE THEREOF, NOTICE WILL BE DELIVERED IN ACCORDANCE WITH THE POLICY PROVISIONS.

AUTHORIZED REPRESENTATIVE
Suzanne Speed

© 1988-2015 ACORD CORPORATION. All rights reserved.

# Additional Insured – Automatic Status When Required By Contract With You – VADCA1021 10 17

Policy Amendment

**This Endorsement modifies insurance provided under the Garage Coverage Form.**

---

With respect to coverage provided by this endorsement, the provisions of the Coverage Form apply unless modified by the endorsement.

This endorsement changes the policy effective on the inception date of the policy unless another date is indicated below.

| | |
|---|---|
| **Endorsement Effective:** | 1/9/2026 |
| **Named Insured:** | Watsonville Auto Group |

**A.** The following is added to **SECTION II - LIABILITY COVERAGE** Paragraph **A.3.b., Coverage, Who Is An Insured:**

The following are also "insureds" for "garage operations" other than covered "autos":

Any person or organization acting on your behalf pursuant to a written contract or agreement between you and such person or organization, but only with respect to liability arising out of your operations or premises owned by or rented to you, and only if you are obligated pursuant to such contract or agreement to provide them with such insurance as is afforded by this policy.

However, with respect to the insurance afforded to these additional "insureds", this insurance does not apply to any:

1. Person or organization who is more specifically described under any other provision of the Who Is An Insured section of this policy (regardless of any limitation applicable thereto);
2. "Bodily injury" or "property damage" arising out of the sole negligence of such person or organization; or
3. Assumption of liability by such person or organization in a contract or agreement. This limitation does not apply to the liability for damages for injury or damage to which this insurance applies that the person or organization would have in the absence of such contract or agreement.

**B.** With respect to the insurance afforded to these additional "insureds", the following is added to **SECTION II - LIABILITY COVERAGE,** Paragraph **C. Limit Of Insurance:**

The most we will pay on behalf of the additional "insured" is the lesser of the amount of insurance:

1. Required by the contract or agreement you have entered into with the additional "insured"; or
2. Available under the applicable Limits of Insurance shown in the Declarations.

This endorsement shall not increase the applicable Limits of Insurance shown in the Declarations.

**Named Insured Schedule:**

| |
|---|
| Watsonville Auto Group |
| WCAF, LLC DBA Watsonville Ford |
| WCDJR, LLC DBA Watsonville CDJR |
| 72 Hour LLC dba: Chevrolet of Watsonville |
| dba: National Auto Fleet Group |
| dba: National Truck Sales & Service |
| dba: Watsonville Buying Center |
| dba: Watsonville Fleet Group |
| So Cal Autoland, LLC |

**THIS ENDORSEMENT CHANGES THE POLICY. PLEASE READ IT CAREFULLY.**

# WAIVER OF TRANSFER OF RIGHTS OF RECOVERY AGAINST OTHERS TO US (WAIVER OF SUBROGATION)

This endorsement modifies insurance provided under the following:

BUSINESS AUTO COVERAGE FORM
BUSINESS AUTO PHYSICAL DAMAGE COVERAGE FORM
GARAGE COVERAGE FORM
MOTOR CARRIER COVERAGE FORM
TRUCKERS COVERAGE FORM

With respect to coverage provided by this endorsement, the provisions of the Coverage Form apply unless modified by the endorsement.

This endorsement changes the policy effective on the inception date of the policy unless another date is indicated below.

**Named Insured: Watsonville Auto Group**

**Endorsement Effective Date: 1/9/2026**

**SCHEDULE**

**Name(s) Of Person(s) Or Organization(s): Blanket Waiver of Subrogation**

**Blanket waiver of Subrogation., but only as respects the negligent acts of our insured.**

Information required to complete this Schedule, if not shown above, will be shown in the Declarations.

The **Transfer Of Rights Of Recovery Against Others To Us** Condition does not apply to the person(s) or organization(s) shown in the Schedule, but only to the extent that subrogation is waived prior to the "accident" or the "loss" under a contract with that person or organization


© Insurance Services Office, Inc., 2009

**THIS ENDORSEMENT CHANGES THE POLICY. PLEASE READ IT CAREFULLY.**

# PRIMARY AND NON-CONTRIBUTORY LIABILITY INSURANCE

This endorsement modifies insurance provided under the following:

BUSINESS AUTO COVERAGE FORM
GARAGE COVERAGE FORM

With respect to coverage provided by this endorsement, the provisions of the Coverage Form apply unless modified by the endorsement.

This endorsement changes the policy effective on the inception date of the policy unless another date is indicated below.

| | |
|---|---|
| **Named Insured:** | Watsonville Auto Group |
| **Endorsement Effective Date:** | 1/9/2026 |

**SCHEDULE**

| |
|---|
| **Name(s) Of Person(s) Or Organization(s): Blanket primary and non-contributory**<br><br>**but only as respects the negligent acts of our insured.** |
| Information required to complete this Schedule, if not shown above, will be shown in the Declarations. |

The following is added to Item 5. – "**Other Insurance**" of Item B. – "**General Conditions**" under Section IV – "**Business Auto Conditions**":

e. Regardless of the provisions of Paragraph 5.a. through d. above, for any liability arising out of the ownership, maintenance, use, rental, lease, loan, hire or borrowing by an "insured" of a covered "auto" for which an "insured" is contractually obligated to provide primary insurance coverage to a client, this Coverage Form will be primary and non-contributory with respect to the Persons or Organizations in the schedule, regardless of the availability or existence of other collectible insurance under any other Coverage Form or policy that applies on a primary basis.

**Endorsement Agreement**

**Waiver of Subrogation**
**Blanket Basis**

9392846-2026
New
SC
0-49-56-91


Home Office
San Francisco
All Effective Dates are
at 12:01 AM Pacific
Standard Time or the
Time Indicated at
Pacific Standard Time

Effective January 1, 2026 at 12:01 AM
and Expiring January 1, 2027 at 12:01 AM

72 HOUR LLC
490 AUTO CENTER DR
WATSONVILLE, CA 95076-3726

We have the right to recover our payments from anyone liable for an injury covered by this policy. We will not enforce our right against the person or organization named in the schedule.

This agreement applies only to the extent that you perform work under a written contract that requires you to obtain this agreement from us.

The additional premium for this endorsement shall be 2.00% of the total policy premium.

Schedule

| Person or Organization | Job Description |
| --- | --- |
| Any person or organization for whom the named Insured has agreed by written contract to furnish this waiver | Blanket Waiver of Subrogation |

Nothing in this endorsement shall be held to vary, alter, waive or extend any of the terms, conditions, agreements, or limitations of this policy other than as above stated. Nothing elsewhere in this policy shall be held to vary, alter, waive or limit the terms, conditions, agreements or limitations in this endorsement.

Countersigned and Issued at San Francisco January 5, 2026

2572 Authorized Representative President and CEO SF – END